DATE FEBRUARY 23, 2007	OUTLINE DIMENSIONS	MOTOR TYPE: ASHH
CATALOG NO. DHP7/565	3-PHASE INDUCTION MOTOR	FRAME NO. 254T

Pole	HP	KW	Hz	VOLT	Syn. Speed RPM
6	7.5	5.6	60	575	1200

Ins	Rating	Dimension in	Approx Weight	Bearings
F	CONT.	inch	247 lbs.	DE: 6310zz NDE: 6309zz

Open Protected Drip-Proof Squirrel-Cage Rotor.

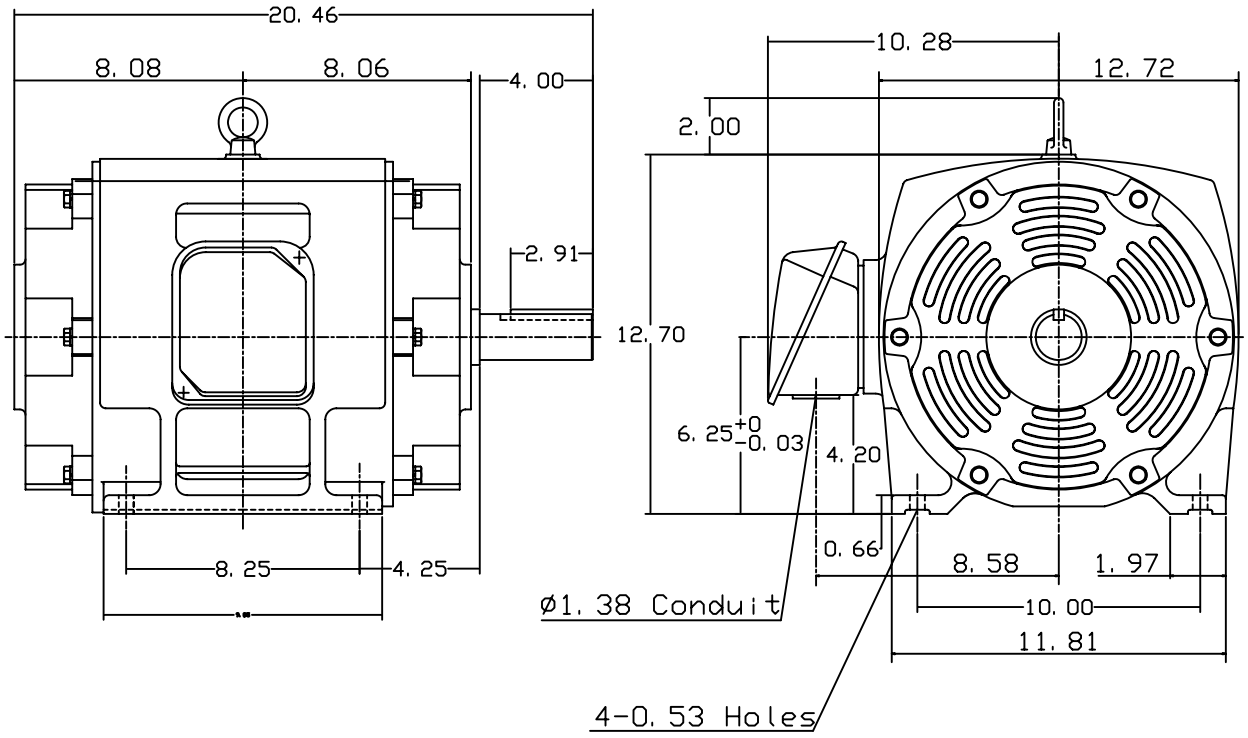

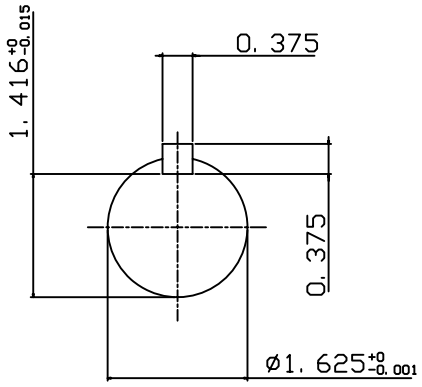

DWN.	J. H. LIANG	12·22·98	TECO Westinghouse	DWG NO.
CHKD.	C. H. KAO	06·10·99		31057H383000
APPD.	Y. B. HUANG	06·10·99		